ALL-NEW

ISUZU TRAVIZ

TRANSCEND YOUR BUSINESS

TRAVIZ lightweight truck shown with Utility Van body option.

ALL-NEW

ISUZU TRAVIZ

Transcending your business, that is the core of what the Isuzu Traviz truly is. Built with the strength of the Isuzu trucks and the body size of a pick-up, the Isuzu Traviz is the City Approach truck that your business needs.

With a modern design and compact body build, the Traviz is ready to take your business wherever it needs to go, whether on narrow city streets or rough dirt roads.

With its comfortable and new cabin design coupled with the Isuzu Blue Power Engine, the Traviz keeps you and your business safe with better visibility, easier maneuverability and its fuel efficiency.

The Isuzu Traviz, the lightweight yet powerful business partner.

ISUZU 4JA1
DIRECT INJECTION COMMON RAIL
BLUE POWER DIESEL ENGINE

COMFORTABLE CABIN
TRAVIZ's cabin is able to accommodate up to three people with spacious legroom, ergonomically designed interior and better visibility.

AIRCONDITIONED
The cabin also has a built-in air conditioning unit for the passengers' comfort. (Client option)

BUILT-IN ENTERTAINMENT
The cabin also comes with a built-in radio system. The radio is USB-ready and has a wide reception area.

POWER STEERING
The power steering function allows the driver to drive comfortably, using minimal effort for maximum control.

EASY TO READ CONSOLE
Equipped with an easy to read instrument panel with Tachometer, designed for the driver's convenience.

Dropside Truck

Aluminum Van

Refrigerated Van

FUEL EFFICIENT

With the power of Isuzu's Blue Power Diesel Engine, the TRAVIZ boasts excellent fuel economy without compromising the engine output.

LOAD EFFICIENCY

With a High Payload Capacity and different body options, the TRAVIZ can easily transport your cargo wherever it needs to go.

EASY MANEUVERABILITY

With its lightweight body size, the TRAVIZ can move in the busiest areas and drive in the narrowest of streets, requiring only 4.5 meters for a complete U-turn.

SHORTER BRAKE FORCE

With a bigger front and rear brake similar to the Isuzu pick-up trucks, the TRAVIZ has superior braking power.

EASY INGRESS AND EGRESS

Safely hop in and out of the cab with ease and convenience.

MADE WITH ISUZU DURABILITY

Equipped with the Timing Chain for longer engine lifespan, built with a durable axle, chassis and 6-stud disc wheel, the TRAVIZ is capable to run long mileage and carry heavy load even in the toughest conditions.

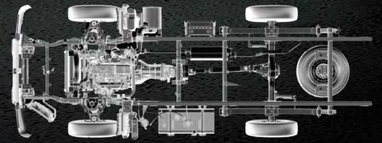

TRAVIZ lightweight truck shown in different body options.

TRAVIZ SPECIFICATIONS

MODEL		TRAVIZ S	TRAVIZ L
Seating Capacity	person	Three (3)	
ENGINE			
Model		4JA1 Direct Injection Common Rail Blue Power Diesel Engine	
Displacement	(cc)	2,499	
Emission Rating		Euro 4	
Max. Power	PS/rpm	78/3,900	
Max. Torque	N-m/rpm	176.5/1,800	
Fuel Tank Capacity	Liters	50	
SUSPENSION			
Front		Double Wishbone with Coil Spring	
Rear		Semi-Elliptical Leaf Spring	
BRAKES			
Front		Ventilated Disc	
Rear		Drum, Leading and Trailing	
Brake Assist System		Hydraulic - Vacuum Assisted Dual Circuit	
Brake Control		Deceleration Sensing Proportioning Valve (DSPV)	
TRANSMISSION			
Model		MUA-5S	
Type		5-speed Manual	
GEAR RATIO	1st	4.357	
	2nd	2.502	
	3rd	1.501	
	4th	1.000	
	5th	0.809	
	Rev.	3.970	
Final Gear Ratio		4.777	
ELECTRIC SYSTEM			
Battery		65D26R x 1	
Voltage and Alternator		12V - 90A	
WHEEL AND TIRE			
Wheel		14x5.5JJ (6 studs)	
Tires		195R 14C 8PR	
CONVENIENCE			
Audio		Tuner Radio with USB, Two Speakers	
Reverse Warning Buzzer		Equipped	
Air-Conditioning System		Optional	

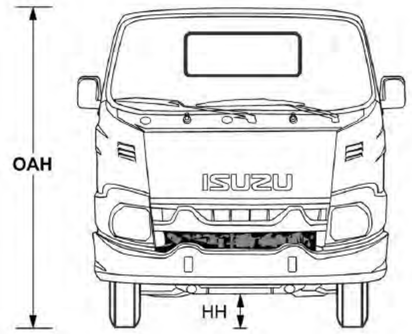

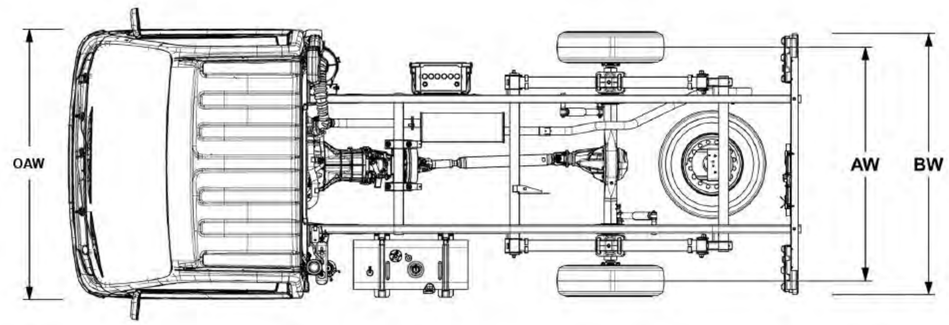

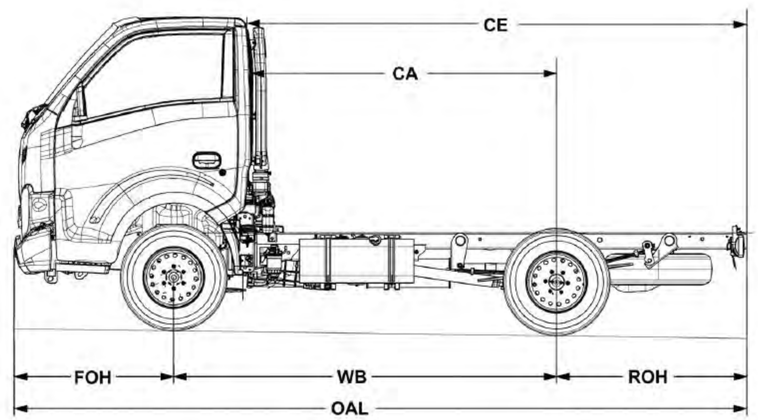

CAB AND CHASSIS DIMENSION (mm)

MODEL	WB	OAL	OAW	OAH	FOH	ROH	CE	CA	AW	BW	HH
TRAVIZ S	2,250	4,450	1,695	1,955	1,005	1,195	2,950	1,755	1,460	1,660	200
TRAVIZ L	2,400	4,600	1,695	1,955	1,005	1,195	3,100	1,905	1,460	1,660	200

CAB AND CHASSIS WEIGHT (kg)

MODEL	GVW	CAB AND CHASSIS MASS	FRONT	REAR	PAYLOAD
TRAVIZ S	2,950	1,290	920	370	1,660
TRAVIZ L		1,295	920	375	1,655

Isuzu Philippines Corporation reserves the right to change features and specifications without prior notice.
Details, descriptions, and illustrations are for informational purposes only and may vary from actual units.

Dealership:

Printed November 2019

ISUZU
Your responsible partner

ISUZU PHILIPPINES CORPORATION
114 Technology Ave., Phase II, Laguna Technopark, Biñan, Laguna, 4024
Trunkline (049) 541-0224 / (02) 757-6070
Email: customer-relations@isuzuphil.com
/isuzuphilippines @isuzuphil isuzuph www.isuzuphil.com